Connections to DIRECT Connect version of ISKRAEMECO MT174 Meter

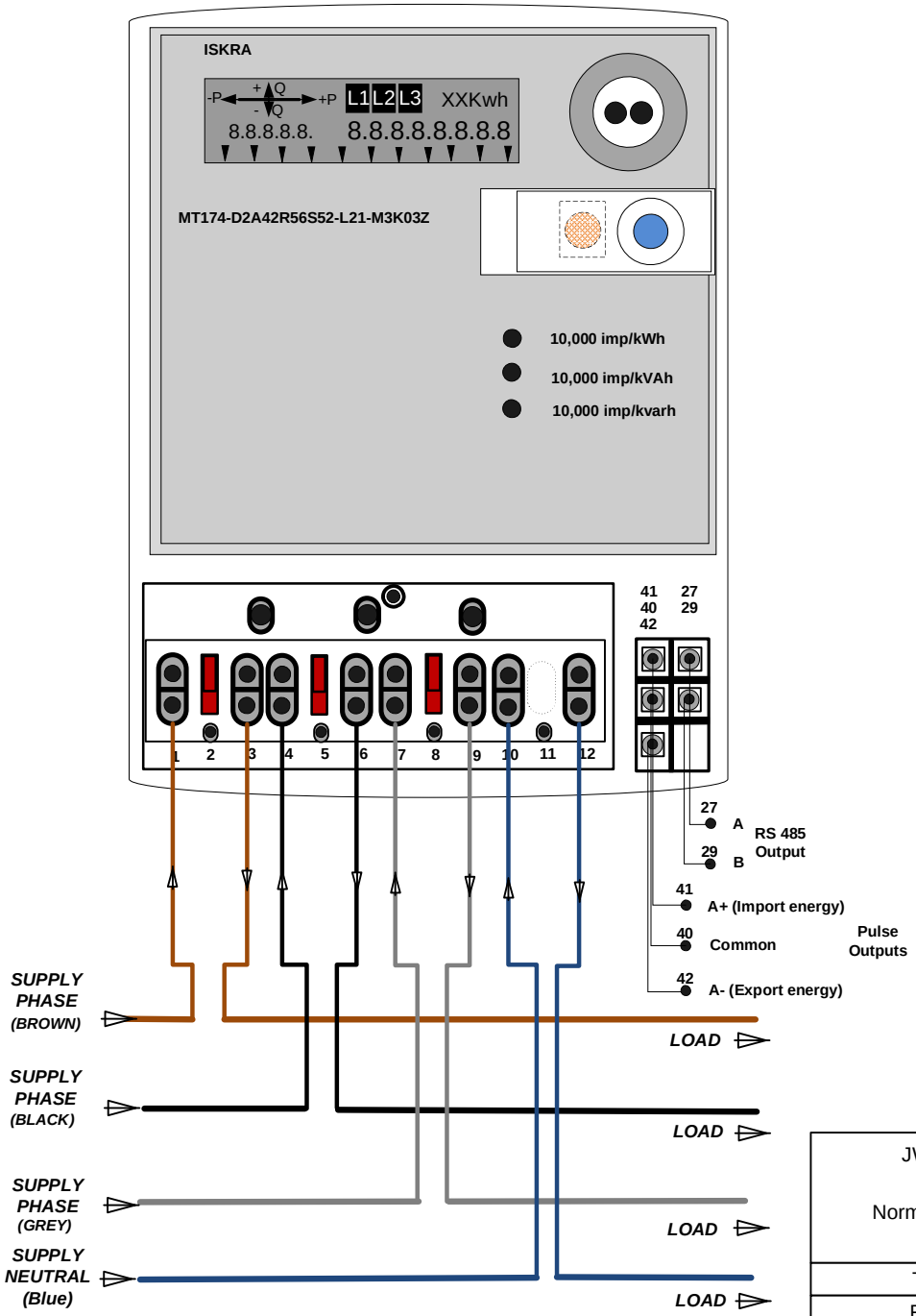

Meter Connection checks

Check the L1, L2 andL3 indicators on the LCD if current conductors are connected correctly:

- L1 L2 L3 indicators are displayed - all three phase voltages are present
- Some of the L1 L2 L3 indicators are not displayed (voltage in these phases is not present). Check if current conductors of these phases are connected and/or their voltage links are in the bottom position (at direct connected meters) or find the reason for the phase voltage absence and eliminate it.
- Some of the L1 L2 L3 indicators are blinking and at the same time import energy indicator is displayed indicating that current through that metering element is reversed. In such a case change the input and the output of the corresponding current terminals.
- L1 L2 L3 indicators are blinking - reversed phase sequence that causes rotation of magnetic field in reversed direction. In this case check current conductors sequence in the meter or find the place of reversed voltage phase sequence and connect them correctly.

Note: Reversed phase sequence does not influence in energy measurement accuracy

JW Smart Meters Ltd
1, Church Lane,
Normanton, West Yorkshire
WF6 2DE

Tel: 01924 891049

Fax: 01924 220846

DESCRIPTION: Single MT174-D2A42R56S52-L21-M3K0Z Connections

Date:	Drawn by:	DWG NO	REV
2016	*S.Valentine*		1
SCALE	NTS	SHEET	4 OF 6